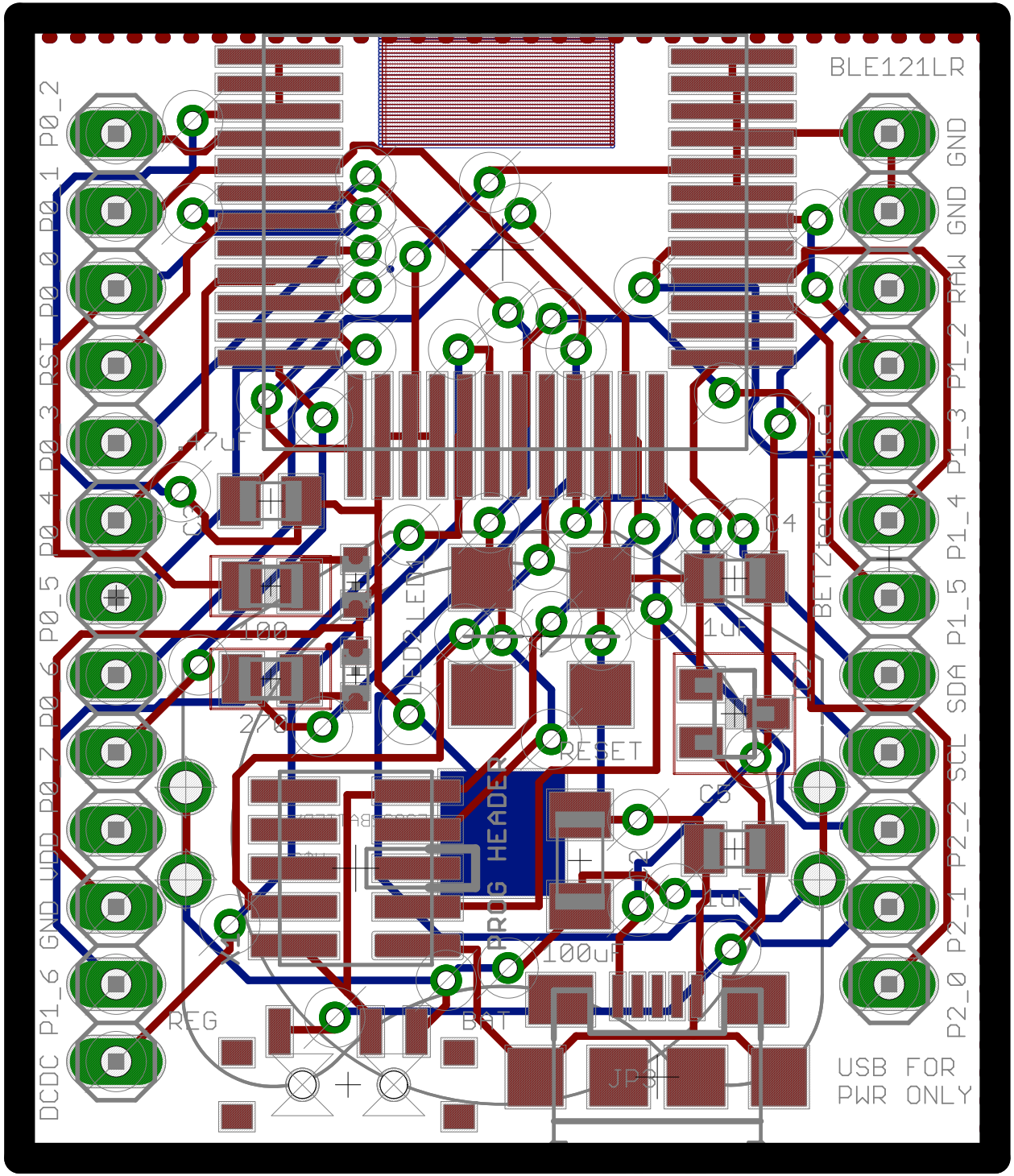

2015-03-28 9:24 PM f=5.00 /Users/peterbetz/OneDrive/eagle/BLE121LR BOB/BLE121LR/BLE121.brd